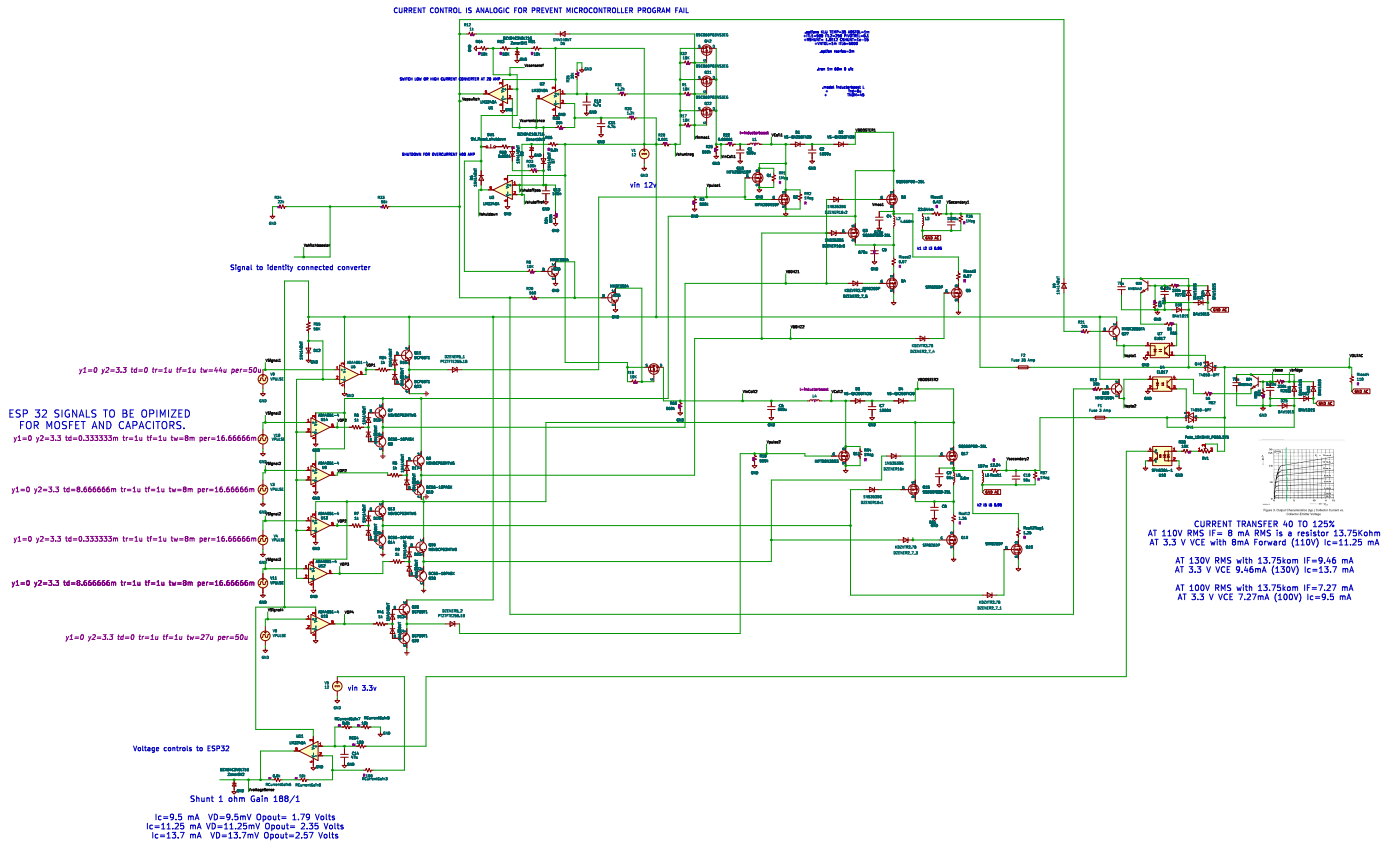

FOR BATTERY CHARGE WITH 3 DEVICES:

CONDITION ABS(VIN – VOUT) < 1 V (BUCK–BOOST CONVERTER)

NEXT TWO CONDITIONS ARE BY SOFTWATER FORCING OFF MOSFETS

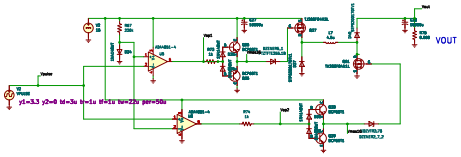

CONTROL REMOTE CIRCUIT FOR THE ALGORITHM DEVICE NUMBER = ON , DEVICE NUMBER +1 = OFF
WHICH USE ODD AN EVEN TO ACT OVER THE PULSE FOR ON OR OFF AND 8 BITS FOR CODING.

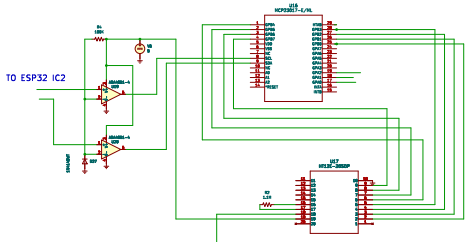

VOLTAGE OF MCP SIGNAL MUST BE SAME AS TE OR LESS
AD8, AD9, AD10, AND AD11 MUST BE HARDWARED SET THE
SAME IN ALRECEIVERS TRANSCEIVERS, CAN BE CHOOSEN
ANY CONVINATION OF THEM.

TRANSCEIVER TX–99V3 CIRCUIT

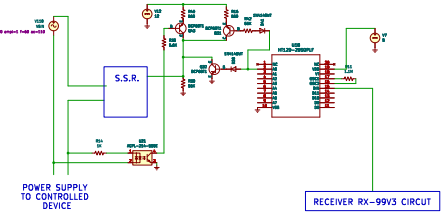

A1,A2,A3,A4,A5,A6,A7,D8,D9,D10,D11 ARE HARDWIRED
TO DEFINE THE ADDRESS OF THE DEVICE.
A0=1 OF TURN ON , A0=0 TURN OFF

Added circuit for control remote.
Power supply design simplified by adding more
Fuses and breakers added
Data bytes added (added parallel)
Sheet 2/
File: REV BOOSTCharbat.sch
Title: Battery Charger and DC/AC converter
Size: A0 | Date: 2026-03-30 | Rev: 1
KiCad 7.0.0, NAT-unknown | Id: 1/1